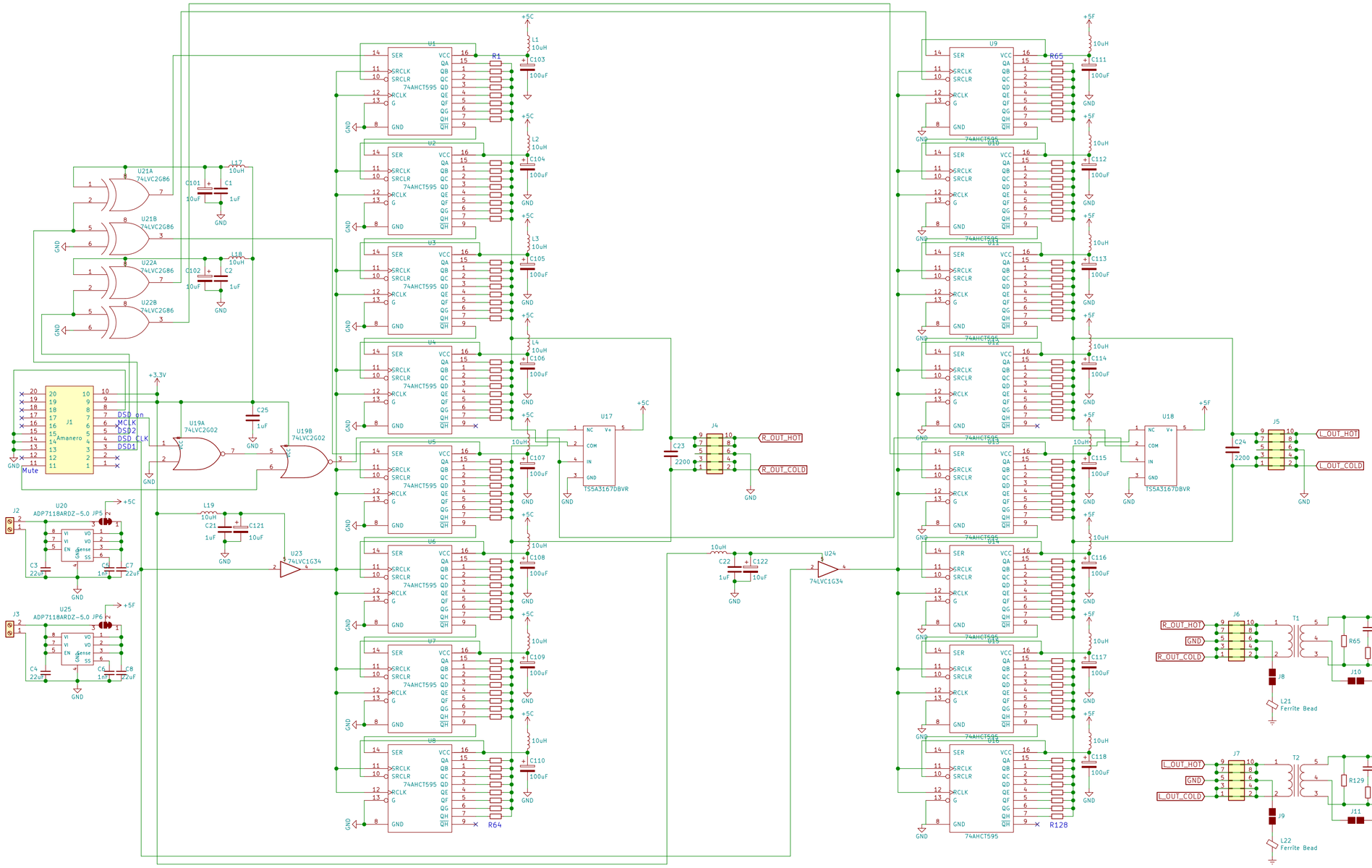

Sheet: /
File: DSC2.sch

Title: DSC2 v2.5.2

Size: A2	Date:	Rev:
KiCad E.D.A. kicad (6.0.0-rc1-dev-305-gf0b8b2136)		Id: 1/1